WILLOUGHBY
HEALTHCARE
PATIENT CARE UNITS

INSTALLATION AND OPERATION MANUAL

IN COMPLIANCE WITH A.D.A. 2010

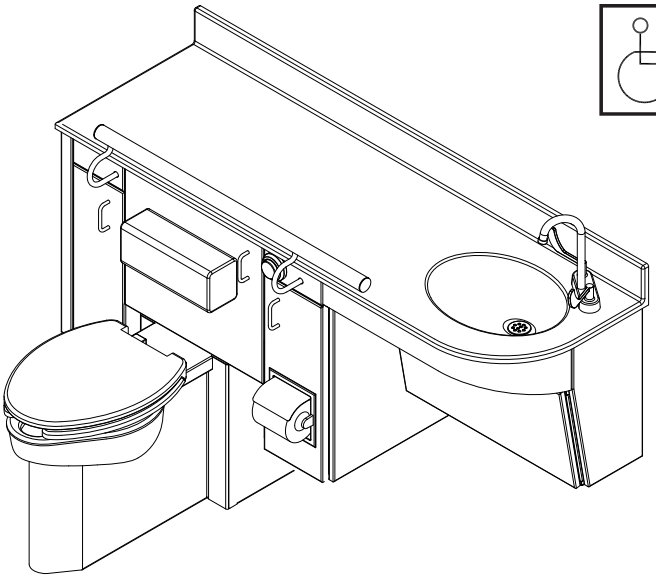

MODELS:

WH-2400 Series

Patient Care Units

TABLE OF CONTENTS

PRE-INSTALLATION INFORMATION 3

PHYSICAL DIMENSIONS 4

ROUGH-IN DIMENSIONS 5

CHECKING CONTENTS 6

INSTALLATION INSTRUCTIONS .....
- Step 1: Unpacking the Patient Care Unit 8
- Step 2: Install the Anchors and Backing 8
- Step 3: Install the Vacuum Breaker 9
- Step 4: Install the WH-2400 Cabinet 9
- Step 5: Install the Toilet and Waste Connections 10
- Step 6: Install the Solid Surface Lavatory Top to the Cabinet 10
- Step 7: Install Faucet and Connect Water Supply 11
- Step 8: Completing Installation 11

CARE AND MAINTENANCE 12

DETAIL DRAWINGS .....
- Stationary PCU Toilet - Wall Waste Outlet H1490-0078 13
- Stationary PCU Toilet - Floor Waste Outlet H1490-0079 14

WARRANTY 15

(PAGE LEFT INTENTIONALLY BLANK)

PRE-INSTALLATION INFORMATION

INSTALLATION NOTICE!

CHECK ROUGH-IN LOCATIONS **PRIOR** TO INSTALLATION

FLUSH LINES THOROUGHLY **PRIOR** TO HOOK-UP

When installing the Willoughby Industries' **WH-2400 Series** Patient Care Units:

Before Step 1 of the Installation Instructions, ensure that rough-ins are in the correct location.

It is essential that the water supply lines be thoroughly flushed prior to making final connection to the hot and cold water supply lines. These lines **must be flushed** sufficiently to remove the small particles of debris that are inherent with new construction projects.

If this debris is not removed, the valving in these units will be damaged. Do not attempt to remove the aerators to flush debris out of the lavatory. The damage can only be fixed by replacing the valves. Damage to valves caused by debris will not be covered by the manufacturer's warranty.

INSTALLATION NOTICE!

CHECK ROUGH-IN LOCATIONS **PRIOR** TO INSTALLATION

FLUSH LINES THOROUGHLY **PRIOR** TO HOOK-UP

PHYSICAL DIMENSIONS- WH-2400 SERIES

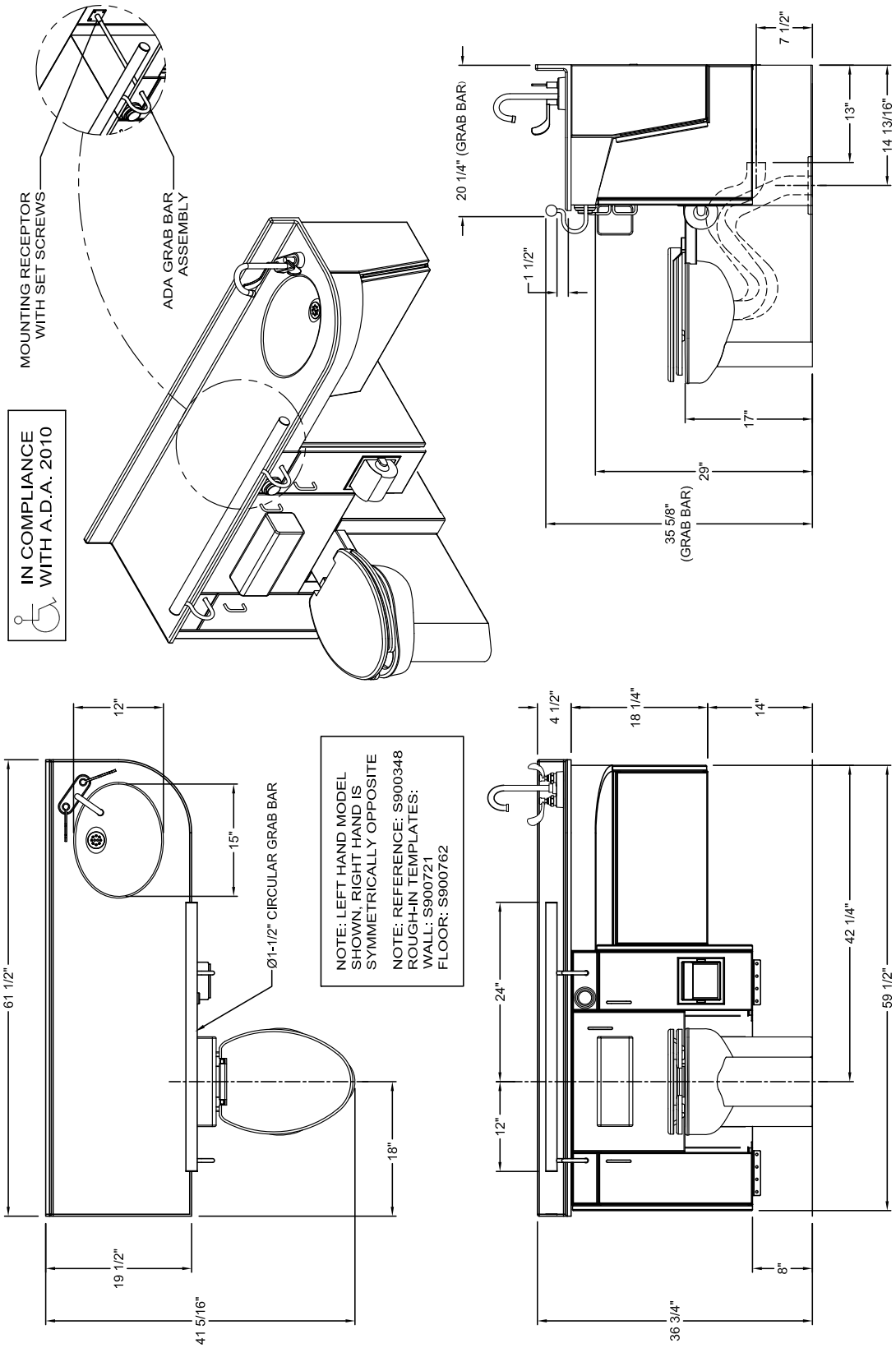

ROUGH-IN DIMENSIONS- WH-2400 SERIES

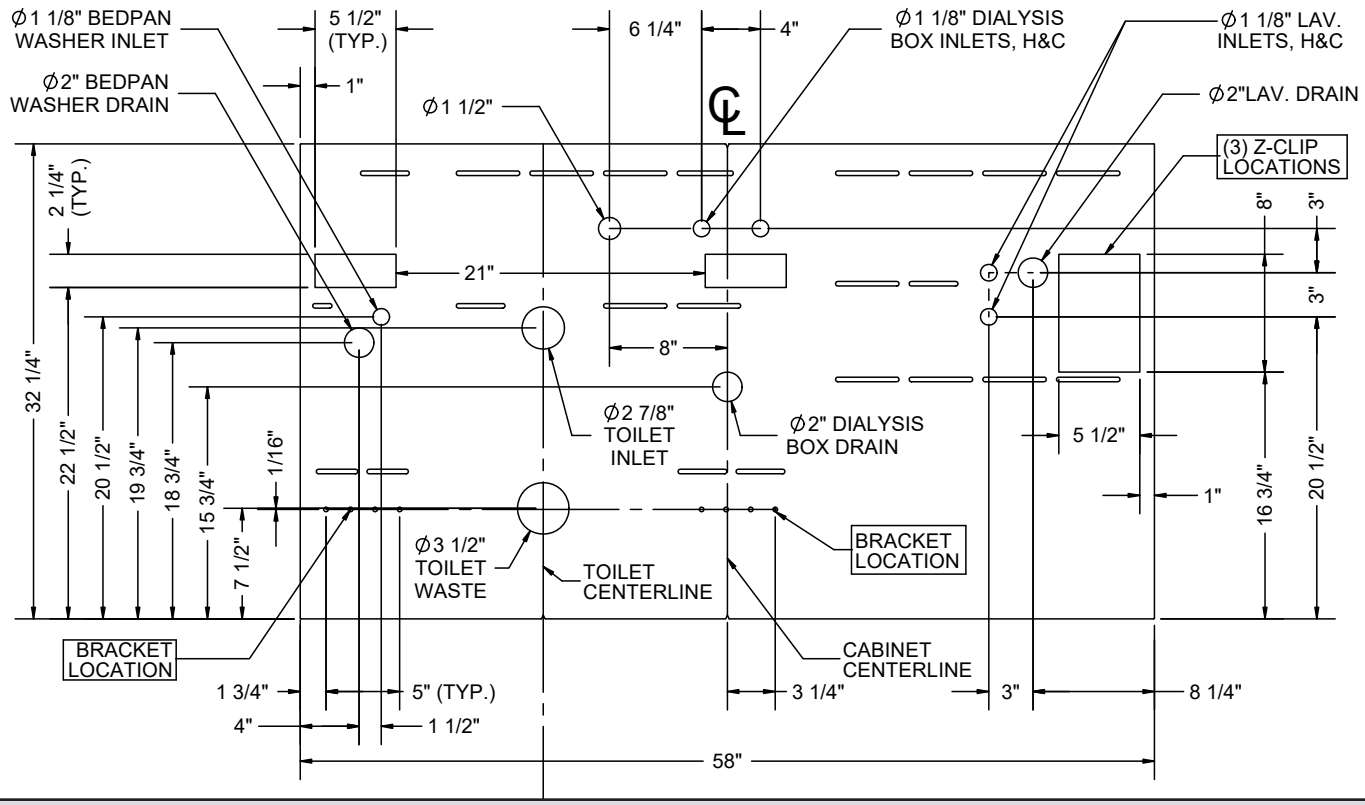

WH-2400 BACK-WALL ROUGH-IN TEMPLATE

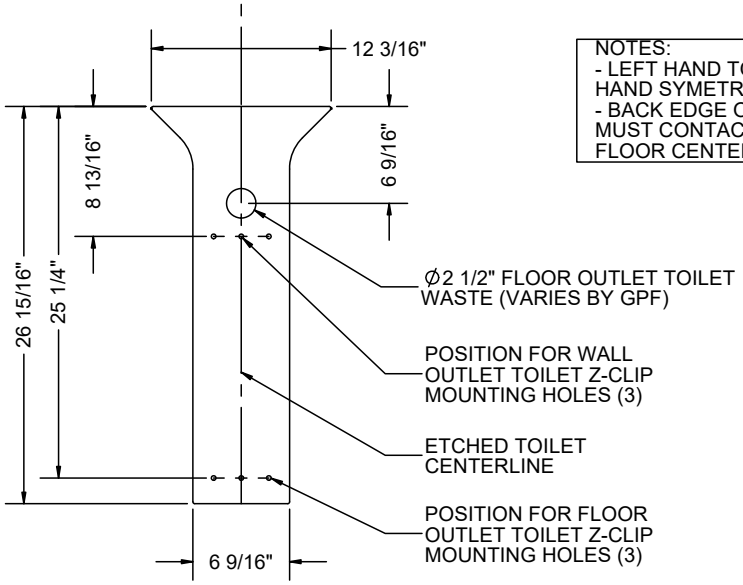

NOTES:
- LEFT HAND TOILET SHOWN, RIGHT HAND SYMETRICALLY OPPOSITE
- BACK EDGE OF FLOOR TEMPLATE MUST CONTACT WALL; ALIGN THE FLOOR CENTERLINE WITH WALL

WH-2400 FLOOR ROUGH-IN TEMPLATE

CHECK CONTENTS

- Separate all parts from packaging and make sure all parts are accounted for before discarding any packaging material. If any parts are missing, do not attempt to install WH-2400 Series Patient Care Unit until you obtain the missing parts.

NOTE: Before beginning installation, all supply, drain and waste piping for the WH-2400 Series must be completed according to specified rough-ins. If you have not received rough-in details, please contact Willoughby Industries, Inc. (800) 428-4065

☐ **IMPORTANT: These installation instructions cover all of the Willoughby Industries Inc. WH-2400 Series Patient Care Units. Simply omit the steps which do not apply to the model you are installing.**

☐ **IMPORTANT: Flush all the water supply lines before making connections.**

© Rev. **9/2022**

REQUIRED INSTALLATION SUPPLIES

- ☐ Hardware for waste outlet connections
- ☐ Gasket for waste outlet connection
- ☐ Shims (for toilet or cabinet installation if necessary)
- ☐ Supply piping to toilet, faucet, foot valve, vacuum breaker, bedpan washer (AS NEEDED)
- ☐ Waste outlet piping to toilet
- ☐ P-trap and drain piping
- ☐ Silicone caulk
- ☐ Proper mounting hardware

☐ **WARNING: Willoughby Industries does not assume any responsibility for personal injury or damage to equipment due to an improperly installed WH-2400 Series Patient Care Unit.**

INSTALLATION INSTRUCTIONS

Step 1: Unpacking the Patient Care Unit

1.) Remove the packaging around the unit.

2.) Locate wall and floor mounting templates (skid will be marked) and set aside. **(DO NOT DISCARD)**

NOTE: Templates are not to be installed as part of the cabinet. They are only used to specifiy rough-in measurements.

Step 2: Install the Anchors and Backing

1.) Select the location where the WH-2400 is to be installed. Using the supplied templates, mark all mounting and rough-in locations.

2.) Remove the templates.

3.) Install appropriate floor anchors to mount the toilet Z-clip securely to the floor (hardware supplied by installer).

4.) For wall outlet toilets, install the appropriate floor anchors in the specified locations.

NOTE: If the floor concrete is lightweight or less than 4" thick, through-bolting to steel angles under the floor is recommended (hardware supplied by installer).

5.) Install adequate backing for mounting the cabinet securely to the wall.

NOTE: Adequate backing and mounting hardware by others.

6.) Install (3) Z-clips to the wall backing. Use template to determine locations.

INSTALLATION INSTRUCTIONS (CONT.)

Step 3: Install the Vacuum Breaker for the WH-2400 Series Patient Care Unit w/ Bedpan Washer

1.) Install the vacuum breaker (supplied by others) to the wall per local code.

NOTE: The vacuum breaker must be mounted on the wall a minimum of 6' from the floor along the centerline of the valve.

2.) Connect the wall piping to the inlet and outlet on the vacuum breaker.

3.) Before installing the cabinet, connect the vacuum breaker outlet to the bedpan washer inlet.

NOTE: All other plumbing connections are made after the cabinet is installed.

Step 4: Install WH-2400 Series Cabinet

1.) With assistance, lift the cabinet and align the Z-clip mounting holes in the back of the cabinet with the Z-clips mounted on the wall in Step 2. When aligned, carefully lower cabinet onto the Z-clips.

2.) Once the cabinet is level, secure cabinet to wall through horizontal mounting slots with proper hardware.

3.) Level and secure cabinet by installing lower mounting brackets with proper hardware

NOTE: Mounting hardware by others.

INSTALLATION INSTRUCTIONS (CONT.)

Step 5: Install the Toilet and Waste Connections

1.) Slide toilet into position over the floor Z-clip installed in Step 2.

2.) Connect the toilet to the floor/wall waste outlet with appropriate gasket. Be sure to square the toilet assembly to the back wall.

3.) Level and support the toilet solidly at the four corners using shims, if needed (shims supplied by installer).

4.) Secure the toilet in place with appropriate hardware.

NOTE: If the waste outlet is through the back, use a no-hub type connector (available as an option).

5.) On WH-2400 models with a back waste connection, tighten the connector clamps at this time.

Step 6: Install the Solid Surface Lavatory Top to the Cabinet

1.) Install the drain assembly inside the lavatory.

2.) Apply a bead of silicone caulk around the outer top edge of the cabinet and between the lavatory top and the wall.

3.) Set the lavatory top in place on the cabinet making sure the back is flush with the wall. Clean up excess caulk around the countertop edge.

INSTALLATION INSTRUCTIONS (CONT.)

Step 7: Install Faucet and Connect Water Supply

NOTE: Please refer to faucet manufacturer's recommended installation instructions.

Step 8: Completing Installation

1.) Connect the flush valve outlet to the water closet.

NOTE: Tighten all flush valve connections.

2.) Install the P-trap (supplied by installer) to the sink drain, and then connect the P-trap to the drain pipe (piping supplied by installer).

3.) After all toilet, faucet, and bedpan washer connections are checked for leaks, activate several times to purge air from the supply lines.

4.) Position Folding Toilet Cover and/or Toilet Shroud Assembly and secure to the toilet with attachment screws.

5.) Align and secure the folding cover recess cabinet door onto the WH-2400 cabinet.

6.) Close all access doors when finished.

CARE AND MAINTENANCE

Solid Surface Care

Aquasurf® surfaces may be easily cleaned using conventional cleaning agents such as an ammonia based liquid cleaner, (glass cleaner).

Dry stains on a matte finish can be removed with a 3M Scotch-Brite gray scouring pad or a mild abrasive cleaner.

Burns or scorches can be removed by sanding with coarse grit sandpaper followed by finer grit (220) sandpaper. Follow sanding with a 3M Scotch-Brite gray pad (or equivalent) to match finish of sanding area to surrounding area. A final buffing may be required on polished surfaces. Accidental nicks or chips can be repaired with special patch kits available in all Aquasurf® colors.

Avoid exposing Aquasurf® surfaces to strong chemicals such as acetone's; paint removers and sulfuric acid or hydrochloric chemical cleaners. Exposure to strong chemicals may result in permanent damage to Aquasurf® surfaces.

Stainless Steel Care

Stainless Steels are basically alloys of iron and chromium and are corrosion resistant. Stainless steel has a bright surface that is easy to clean and is free from oxides. Therefore, cleaning of stainless steel is relatively simple and easy if done on a regular basis.

Frequency of cleaning should depend on the rate at which the fixture becomes dirty. Remember that fresh (soft) deposits of all kinds are relatively easy to remove, while removing older (hard) deposits are much more difficult. Establish a cleaning SCHEDULE.

Routine cleaning should involve ordinary soap or detergent and water, applied with a sponge, brush or cloth. Baking soda, borax or any of several non-abrasive commercial cleansing agents can help hasten the cleaning action. After scrubbing, rinse THOROUGHLY and wipe dry.

DO NOT use common steel wool, scouring pads, scrapers, wire brushes, files or other steel tools to clean stainless steel. Such items will scratch the surface or leave small particles of iron imbedded in the surface, which will eventually rust and stain the surface - even appearing as if the stainless itself was rusting.

Certain chemical compounds, if used on stainless steel, can give the appearance of rust and if allowed to stand for long periods of time, can pit the surface of even stainless. Products containing hydrochloric acid, muriatic acid or potassium hydrochloride can ruin the surface.

DRAWING: STATIONARY PCU TOILET - WALL WASTE OUTLET

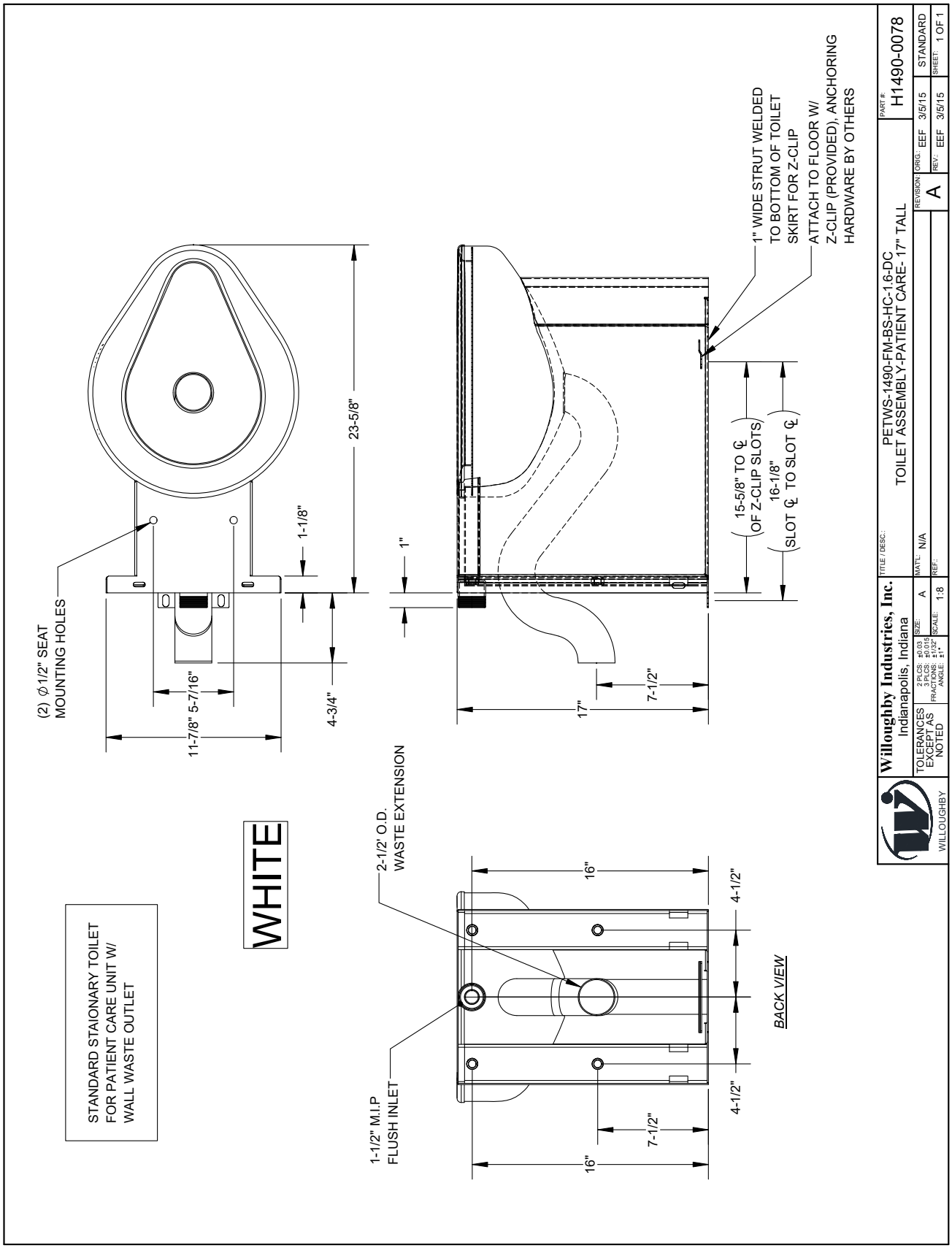

DRAWING: STATIONARY PCU TOILET - FLOOR WASTE OUTLET

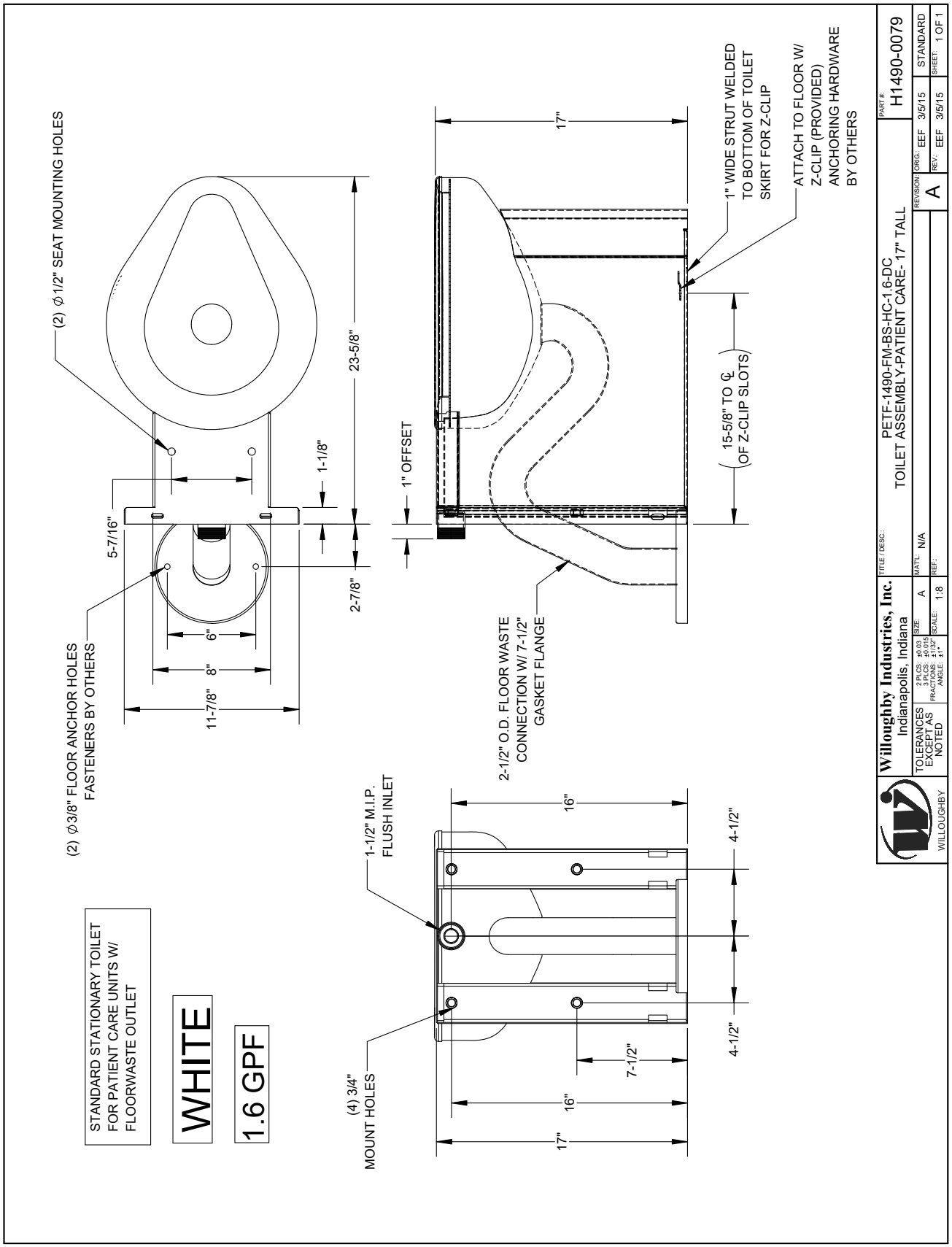

WARRANTY

Aquasurf® Solid Surface Products are a homogeneous blend of resins, mineral filler and colorant manufactured for panels, molded and/or shaped products and components. Aquasurf® Solid Surface products provide a luxurious appearance with the durability of stain proof, impact resistant, burn resistant material with ease of maintenance and cleaning.

Willoughby Industries, Inc. warrants to commercial and institutional purchasers only that each unit will be free from defects in workmanship and materials under normal use and service upon the following terms and conditions. The period during which Aquasurf® components are warranted as follows:

1. Aquasurf® solid surface components are warranted for 2 years from date of shipment.
2. All other components warranted for 1 year from date of shipment.

This warranty does not cover installation or any other labor charges and does not apply to any components damaged by accident, abuse, improper installation or improper maintenance. This warranty does not cover any installation that did not comply with national, state and local building, plumbing or electrical codes. The warranty is limited to replacing or repairing at Willoughbys option, transportation charges prepaid by the purchaser, any Aquasurf® component or part which upon our inspection shall be deemed as defective within the limitations of this warranty. The replacement or repair of defective units as stated in this warranty shall constitute the sole remedy of the purchaser and the sole liability of Willoughby Industries, Inc. Willoughby Industries, Inc. shall not otherwise be liable under any indirect damages caused by defects in the repair or replacement thereof.

This warranty only extends to commercial and institutional purchasers and does not extend to any others, including consumer customers of commercial institutional purchasers. This warranty is in lieu of all other warranties, expressed or implied, including implied warranty of merchantability or fitness or a particular purpose or otherwise.